UNIVERSAL MOTOR
FOR REFRIGERATION

2-pole, with capacitor

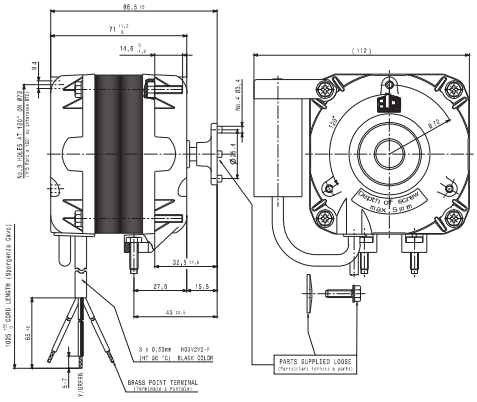

W OUTPUT	W ABS.	m³/h	rpm	A	V	CODE
16	62	2	2600	0,27A	230/240V	**Z000230**

DESCRIPTION
2-pole motor with capacitor, 18/62 Watt, 230/240V, 50/60 Hz 0.27 Amp, 2.600 rpm, capacitor 2 µf, class B

USES
Refrigerated counters, refrigeration circuit evaporators, cooling circuits for industrial machines, and condensation circuits.

PENTAVALENT MOTORS
ELECTRIC FANS

With suction action

W OUTPUT	W ABS.	Ø FAN	MOTOR CODE	BRACKET CODE	FAN CODE	CODE
5	32	200	Z000201	26175000	21120004	**0401001**
10	38	254	Z000202	26186000	21125004	**0401002**
16	65	300	Z000203	26111000	21130004	**0401003**
25	95	300	Z000205	26111000	21130004	**0401005**
34	120	300	Z000225	26111000	21130004	**0401025**

Pack of 3 items. - Also available in energy saving versions.
Complete with Fan, Bracket, and Motor.

GENERAL CHARACTERISTICS:
Single-phase induction motor, 4 shielded poles, 230/240 Volt 50/60 Hz, class B insulation, and IP42 motor protection. They are protected by impedance trip switches or thermal contact inserted in the motor's windings.

The working temperature is between -30°C and +40°C - three-pole output cable 500 mm long.
These motors are widely used in the refrigeration and ventilation sector and are suitable for working in a horizontal and vertical position.